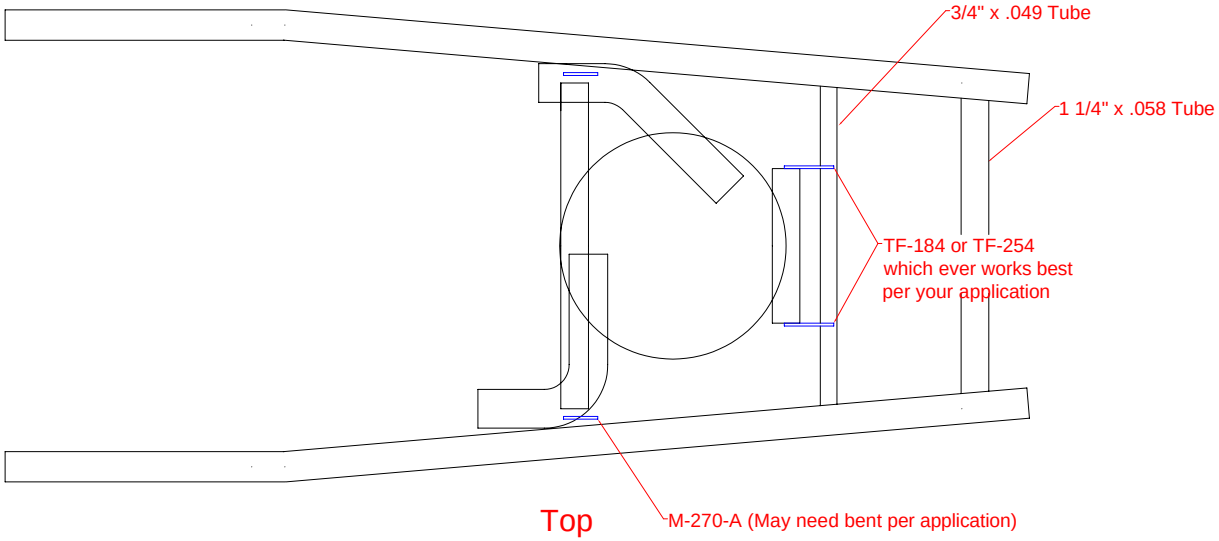

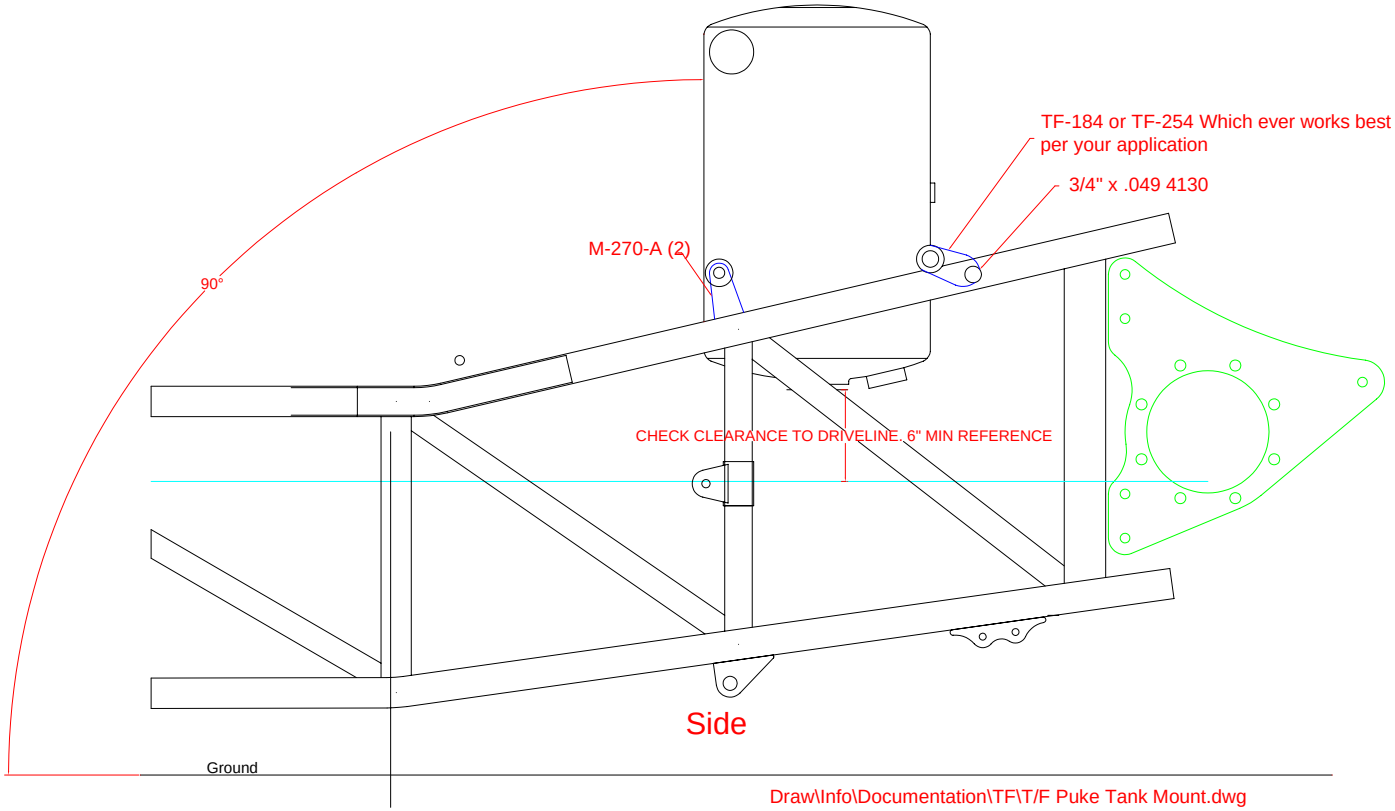

Draw\Info\Documentation\TF\T/F Puke Tank Mount.dwg